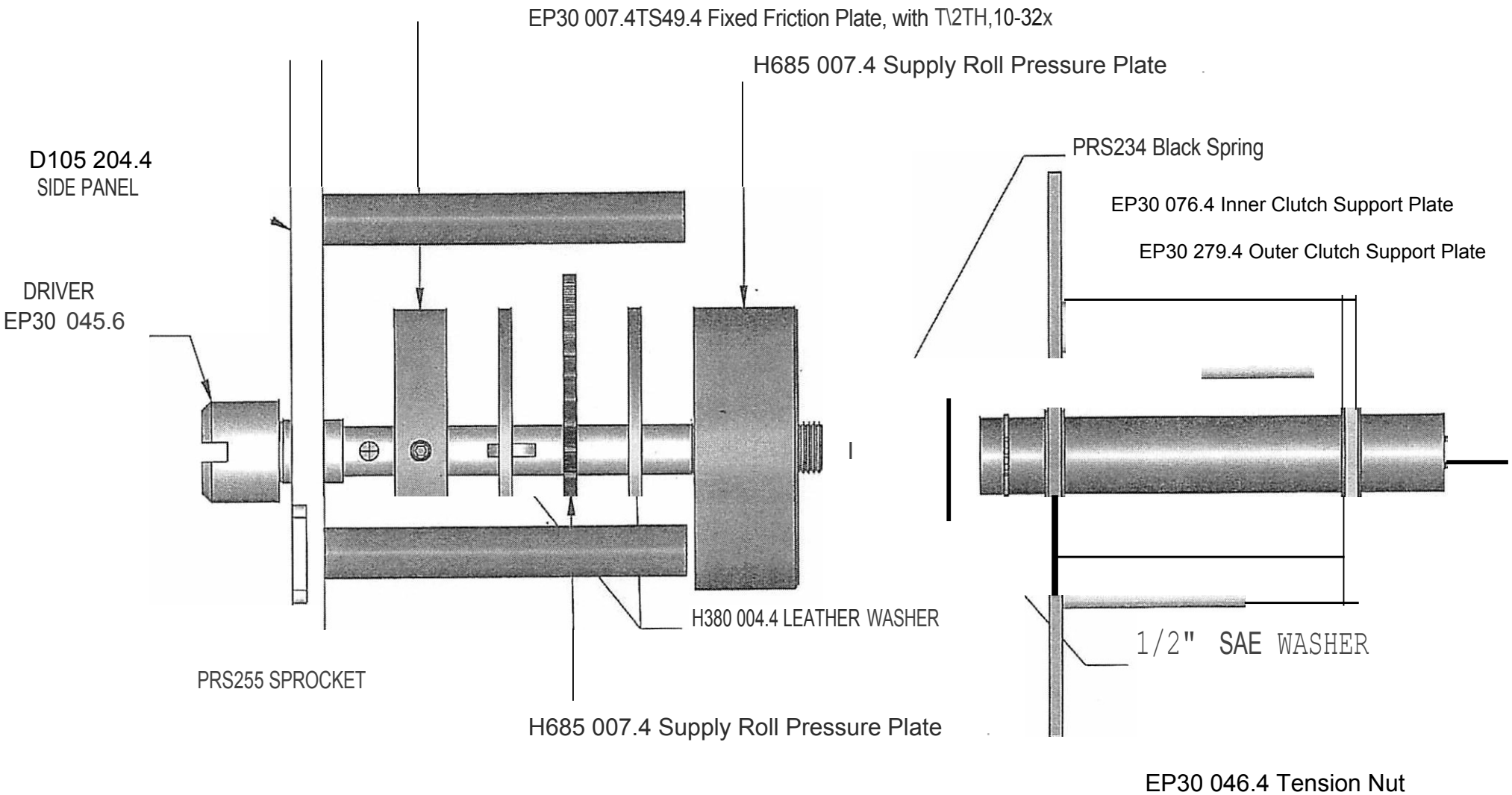EP30 046.5 Rewind Clutch Assembly